Part I

A.

By using a datasheet sourced from the web I was able to obtain the various parameters for the 2N222A transistor at V_{CE} = 10V, I_C = 1mA, f = 1kHz, T = 25°C. The h parameters were given as a range of values [https://www.st.com/resource/en/datasheet/cd00003223.pdf]

$$h_{fe} = 50 – 300$$

$$h_{ie} = 2k\Omega – 8k\Omega$$

$$h_{oe} = 5u℧ – 35u℧ = 29k\Omega – 200k\Omega$$

I chose values that were approximately in the middle of this range

H Parameter	Hybrid-π Parameter	Value
h_{fe}	β	170
No equivalent	gm	0.04℧
h_{ie}	r_π	5kΩ
h_{oe}	r_o	115kΩ

B.

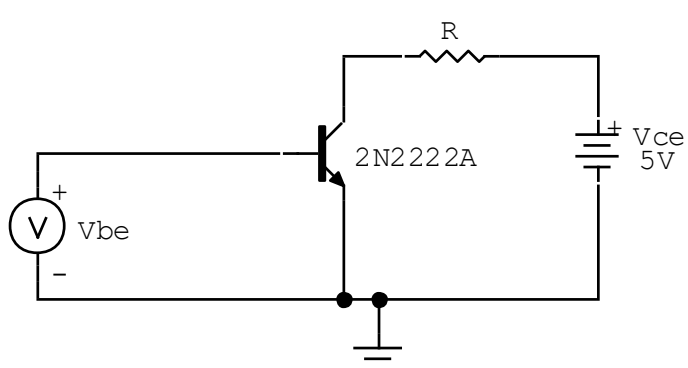

I_B vs V_{BE} Circuit

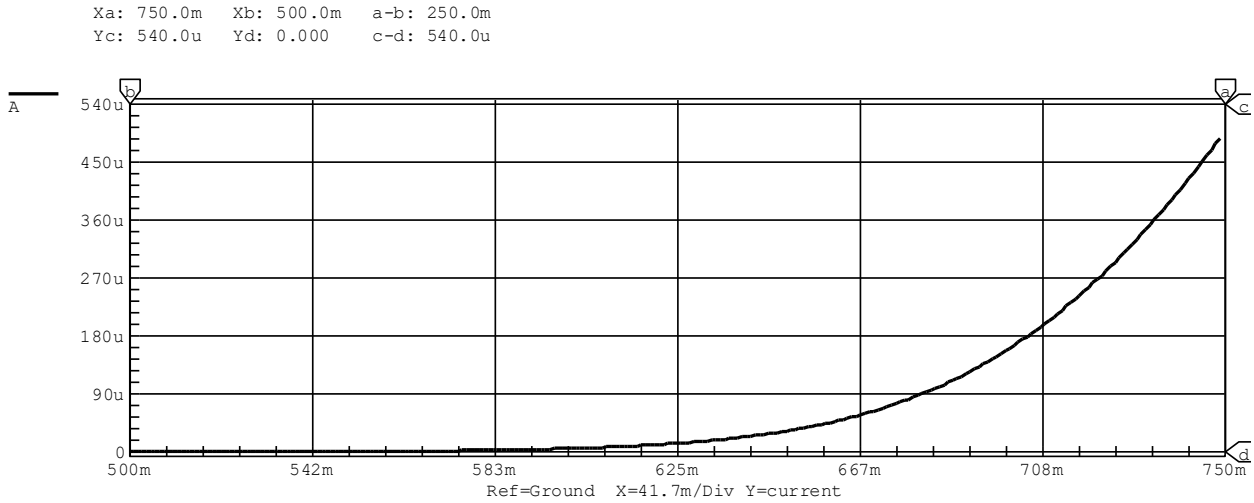

I_B vs V_{BE} Graph

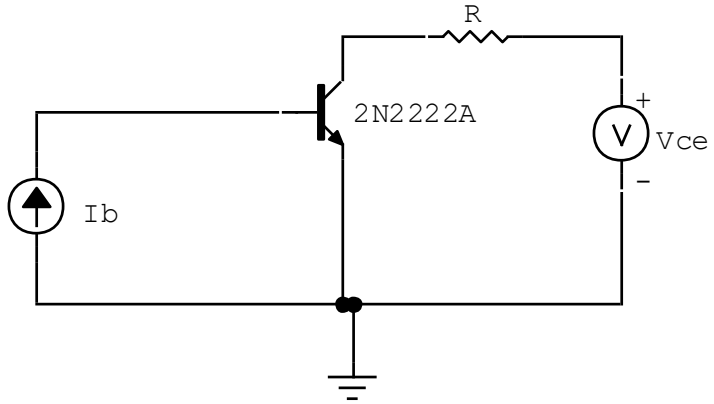

I_C vs V_{CE} with variable I_B

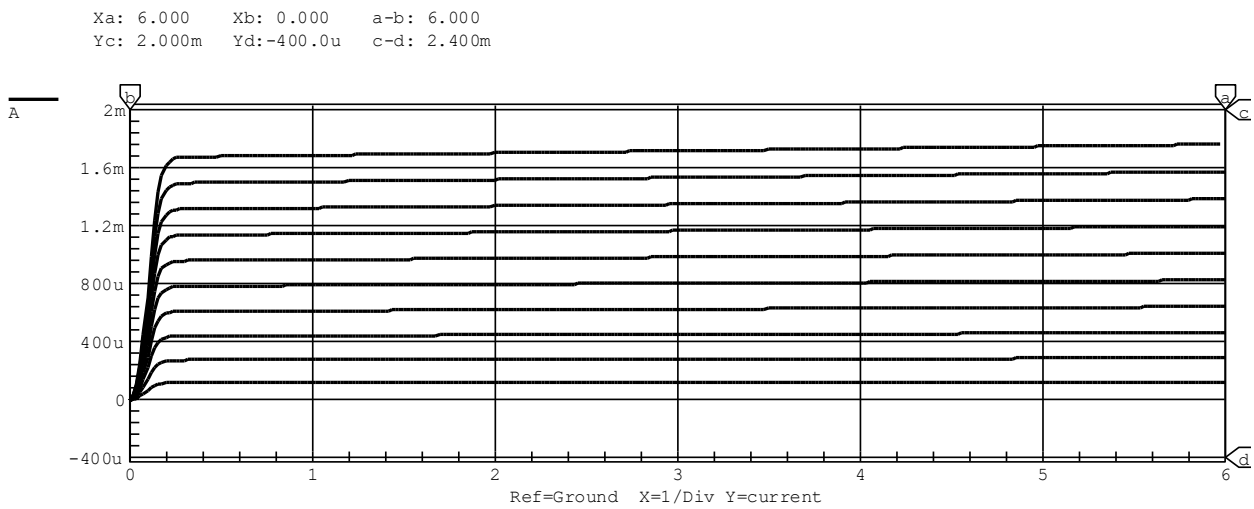

I_C vs V_{CE} with variable I_B Graph

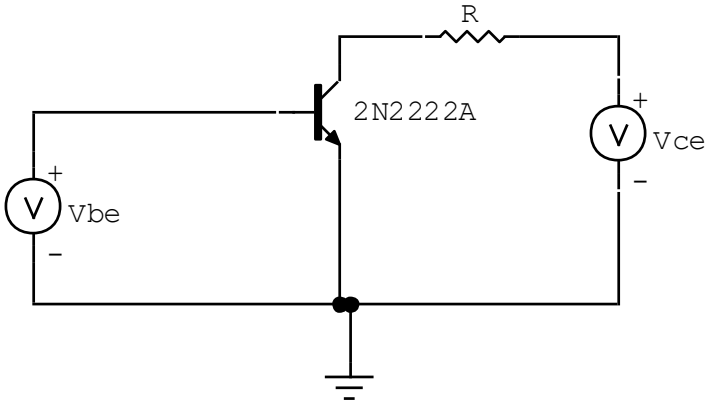

I_C vs V_{CE} with variable V_{BE}

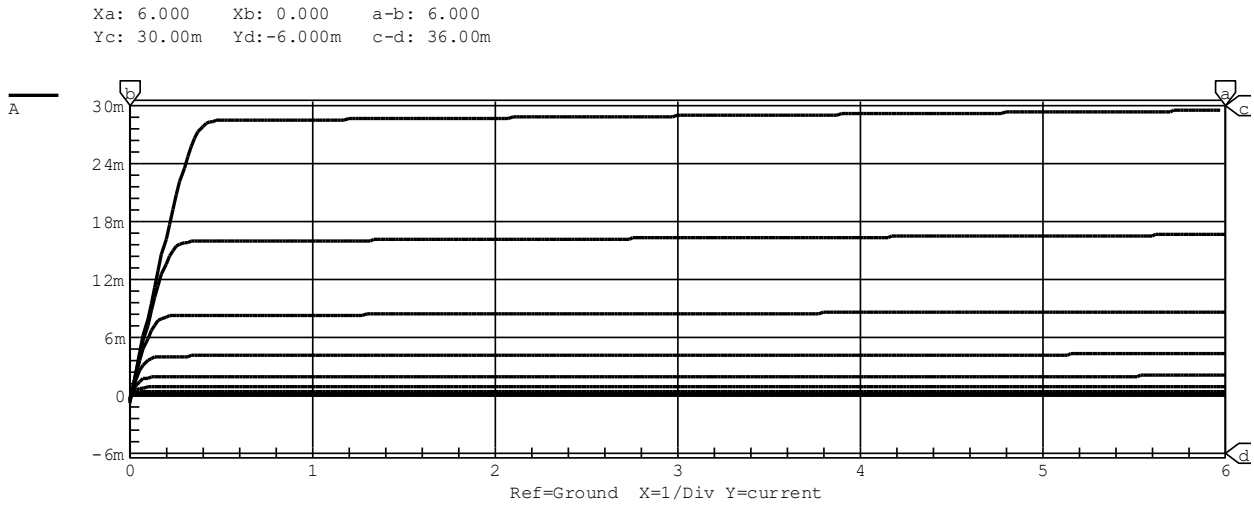

I_C vs V_{CE} with variable V_{BE} Graph

Calculating Parameters from the Curves:

From looking at the plot of I_C vs V_{CE} with I_B as the variable parameter, we can see that the point where V_{CE} = 5V and I_C = 1mA occurs when I_B is approximately 6uA.

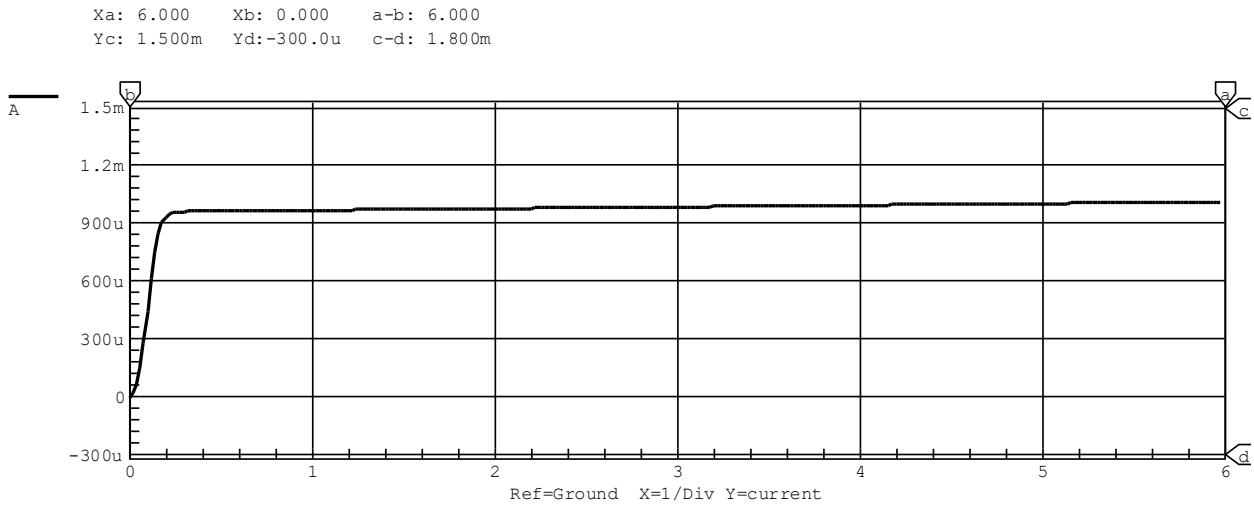

I_C vs V_{CE} with I_B set to 6uA Graph

First, I can calculate β from the equation

$$\beta = \frac{I_C}{I_B}$$
$$= \frac{1mA}{6uA}$$
$$= 167$$

Next, I can calculate the transconductance using the slope of the I_C vs V_{BE} graph

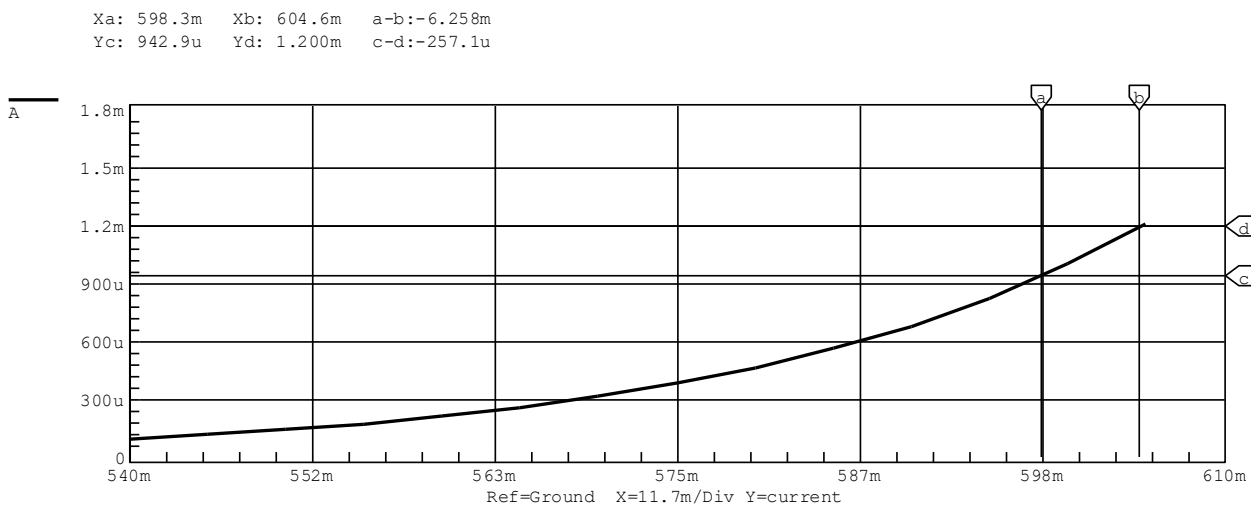

I_C vs V_{BE} Graph

$$gm = \frac{1.2mA - 942.9uA}{604.6mV - 598.3mV}$$
$$= 0.041℧$$

r_π can be calculated using

$$r_\pi = \frac{\beta}{gm}$$
$$= \frac{167}{0.041℧}$$
$$= 4073\Omega$$

Lastly, to calculate r_o we have to first find the early voltage. We can approximate V_A by using the I_C vs V_{CE} plot. The early voltage corresponds to the x intercept of the graph, ie: where $I_C = 0$.

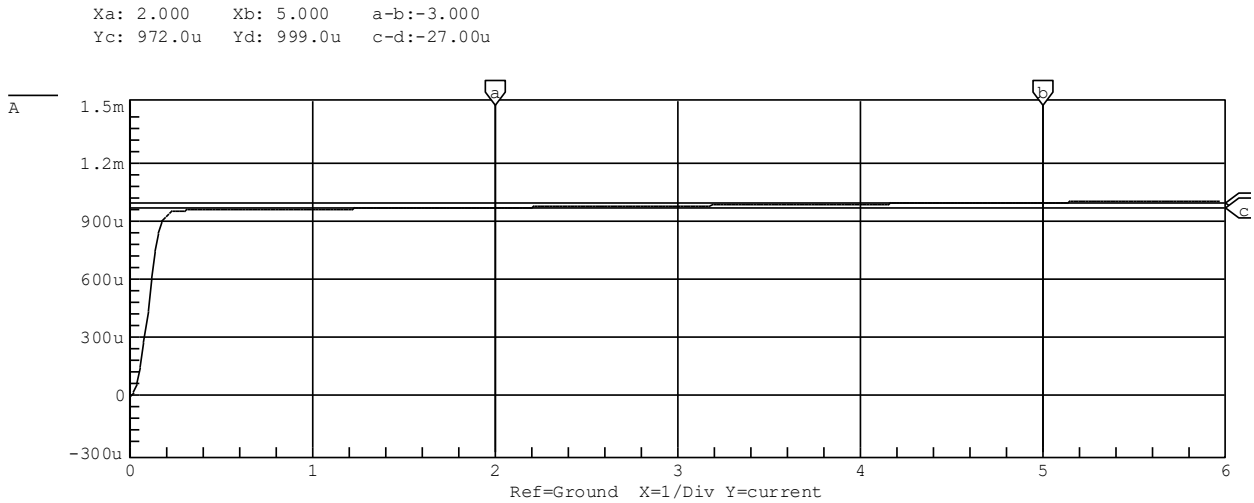

$$Slope = \frac{999uA - 972uA}{5V - 2V}$$
$$= 9u\mho$$

The y intercept can be approximated by a line extrapolation off the curve and is found to be roughly 950uA.

$$y = mx + b$$
$$y = (9 \times 10^{-6})x + 950 \times 10^{-6}$$
$$0 = (9 \times 10^{-6})x + 950 \times 10^{-6}$$
$$x = -105.56$$
$$V_A = 105.56V$$

So r_o is approximately

$$r_o \approx \frac{V_A}{I_C} = \frac{105.56V}{1mA} = 105.56k\Omega$$

Calculated vs Datasheet Comparison:

Parameters	Calculated	Datasheet
β	167	170
gm	0.041℧	0.04℧
r_π	4.073kΩ	5kΩ
r_o	105.56kΩ	115kΩ

Discussion [Calculated vs Datasheet Values]:

We can see from the comparison of calculated values to the values obtained from the datasheet that there is some difference between the parameters. This is as expected because the methods that were used to obtain the calculated values relied heavily on obtaining slopes of curves and extrapolating data. However, this is still a very good approximation with many of the parameters being nearly identical and none of them being significantly far off from those obtained from the datasheet.

C.

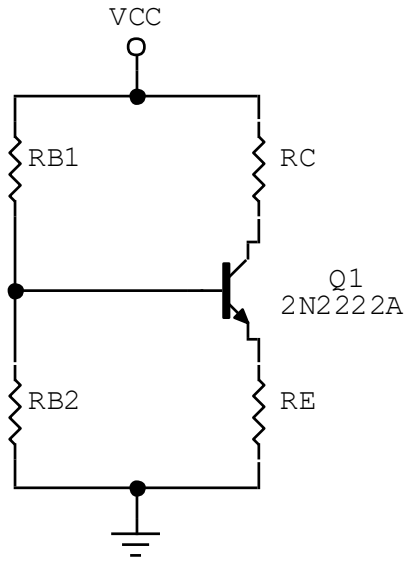

Bias Circuit

Biasing from Calculated Values:

For the 2N2222A transistor the calculated parameters were found to be

$$\beta = 167$$

$$gm = 0.041\mho$$

$$r_\pi = 4073\Omega$$

$$r_o = 105.56k\Omega$$

First, I will compute all the currents given that I_C = 1mA

$$I_C = 1mA$$

$$I_B = \frac{I_C}{\beta} = \frac{1mA}{167} = 6uA$$

$$I_E = I_B + I_C = 1mA + 8uA = 1.006mA$$

Next, using the information that V_{CE} = 4V, I will determine the resistances R_C and R_E

$$15V = R_C(1mA) + 4V + R_E(1.006mA)$$

It is stated that $R_E = \frac{R_C}{2}$

$$15V = R_C(1mA) + 4V + \frac{R_C}{2}(1.006mA)$$

$$R_C = 5484\Omega$$

$$R_E = \frac{R_C}{2} = \frac{5484\Omega}{2} = 2742\Omega$$

Now I can solve for the voltages at the nodes of the transistor. From the I_C vs V_{BE} graph, it can be seen that V_{BE} was approximately 0.6V at the operating point

$$V_E = R_E I_E = (2742\Omega)(1.006mA) = 2.76V$$

$$V_B = V_E + V_{BE} = 2.76V + 0.6V = 3.36V$$

$$V_C = V_E + V_{CE} = (2.76V) + 4V = 6.76V$$

The relationship between the remaining resistors R_{B1} and R_{B2} can be solved for by writing a KCL equation at the base node

$$KCL: \frac{V_{CC} - V_B}{R_{B1}} = \frac{V_B}{R_{B2}} + I_B$$

$$\frac{15V - 3.36V}{R_{B1}} = \frac{3.36V}{R_{B2}} + 6uA$$

Rearranging yields the relationship

$$R_{B1} = \frac{11.64R_{B2}}{(6 \times 10^{-6})R_{B2} + 3.36}$$

So, if I set R_{B2} to be 200kΩ, R_{B1} becomes 510.53kΩ

$$R_{B1} = 510.53k\Omega$$

$$R_{B2} = 200k\Omega$$

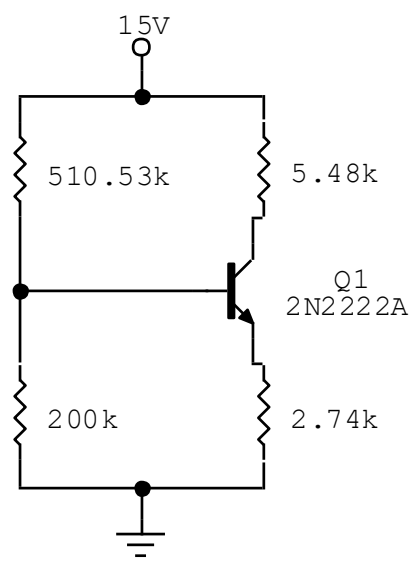

Measured Parameters

D.C. Operating Point [Measured Parameters]

V_B	V_C	V_E	I_B	I_C	I_E
3.369V	9.495V	2.769V	5.934uA	1.005mA	1.010mA

Biasing from 1/3 Rule:

The first version of the 1/3 rule says the following

$$(1)\ V_B = \frac{V_{CC}}{3}$$

$$(2)\ V_C = \frac{2}{3}V_{CC}$$

$$(3)\ I_1 = \frac{I_E}{\sqrt{\beta}}$$

This can be used to find the voltages

$$V_B = \frac{15}{3} = 5V$$

$$V_C = \frac{2}{3}(15) = 10V$$

$$V_C = 5V - 0.6V = 4.4V$$

I also must solve for the currents as they will be used in the resistor equations

$$I_C = 1mA$$

$$I_B = \frac{I_C}{\beta} = \frac{1mA}{167} = 6uA$$

$$I_E = I_B + I_C = 1mA + 6uA = 1.006mA$$

From equation 3 of the 1/3 rule

$$I_1 = \frac{I_E}{\sqrt{\beta}} = \frac{1.006mA}{\sqrt{167}} = 77.85uA$$

Now I have everything to solve for the resistor values

$$R_C = \frac{1}{3}\frac{V_{CC}}{I_C} = \frac{1}{3} \times \frac{15}{1mA} = 5k\Omega$$

$$R_E = \frac{\frac{1}{3}V_{CC} - V_{BE}}{I_E} = \frac{\frac{1}{3} \times 15V - 0.6V}{1.006mA} = 4374\Omega$$

$$R_{B1} = \frac{\frac{2}{3}V_{CC}}{\frac{I_E}{\sqrt{\beta}}} = \frac{\frac{2}{3} \times 15V}{\frac{1.006mA}{\sqrt{167}}} = 128.46k\Omega$$

$$R_{B2} = \frac{R_{B1}}{2}\frac{1}{1-\frac{1}{\sqrt{\beta}}} = \frac{128.46k\Omega}{2}\frac{1}{1-\frac{1}{\sqrt{167}}} = 69.62k\Omega$$

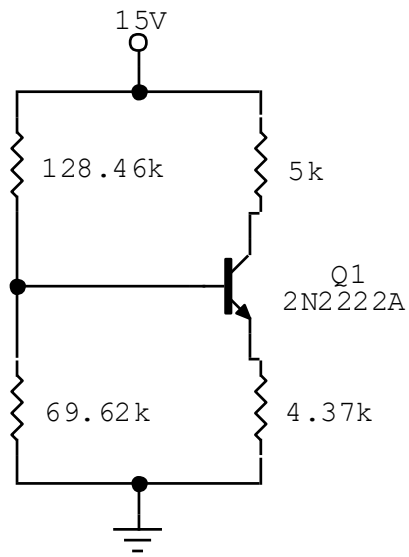

1/3 Rule

D.C. Operating Point [1/3 Rule]

V_B	V_C	V_E	I_B	I_C	I_E
5.003V	9.994V	4.402V	5.981uA	1.003mA	1.009mA

Closest Common Resistors:

Using the closest common resistors found in the Standard Values List I create the following circuit

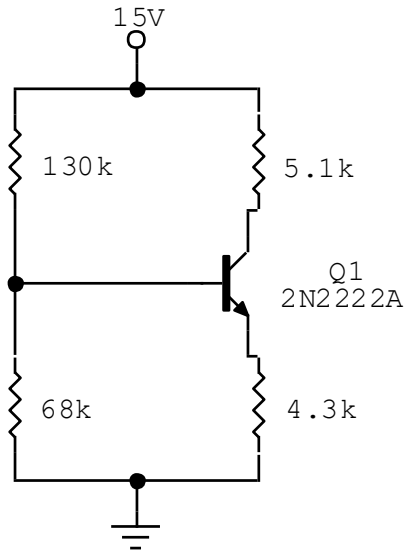

Common Resistors

D.C. Operating Point [Common Resistors]

V_B	V_C	V_E	I_B	I_C	I_E
4.888V	9.946V	4.287V	5.923uA	0.993mA	0.997mA

Discussion [Operating Point Observations]:

Both methods used to bias the circuit yielded operating point results that were acceptable. However, the 1/3 rule is clearly better both in its simplicity for calculating the resistor values and also in the operating point results that it yielded. This simple method is very effective at creating a bias circuit and yields results that are sufficiently accurate.

D. [2N3904]

First, I will recalculate the parameters from part B using the following circuits and the same methods from above

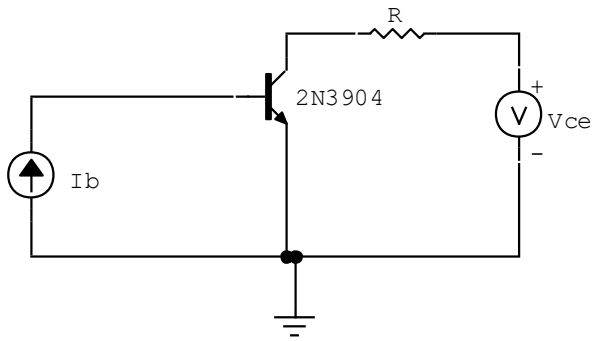

I_C vs V_{CE} with variable I_B

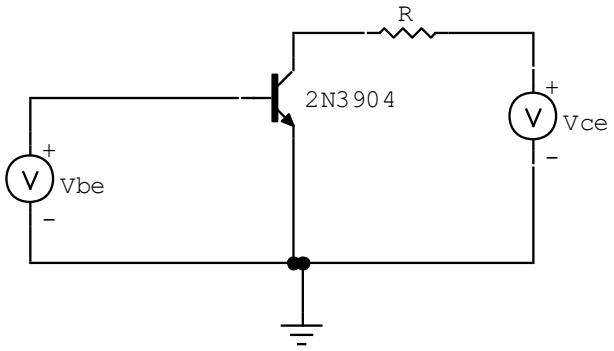

I_C vs V_{CE} with variable V_{BE}

$$\beta = 116$$

$$gm = 0.038\mho$$

$$r_\pi = 3053\Omega$$

$$r_o = 165.79k\Omega$$

Next, I will insert this transistor into the already biased circuits from part 1c(i) and 1c(ii)

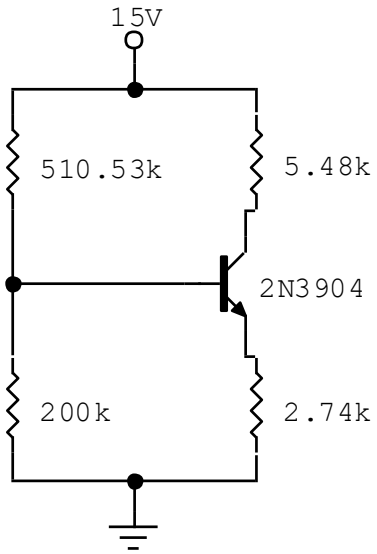

Measured Parameters

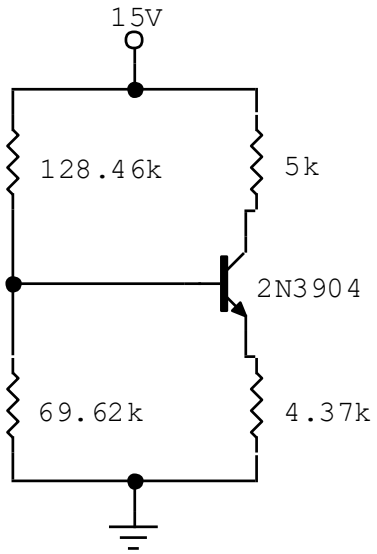

1/3 Rule

D.C. Operating Point [Measured Parameters]

V_B	V_C	V_E	I_B	I_C	I_E
3.129V	10.07V	2.486V	7.605uA	0.8999mA	0.9075mA

D.C. Operating Point [1/3 Rule]

V_B	V_C	V_E	I_B	I_C	I_E
4.903V	10.17V	4.258V	8.169uA	0.9662mA	0.9744mA

D. [2N4401]

First, I will recalculate the parameters from part B using the following circuits and the same methods from above

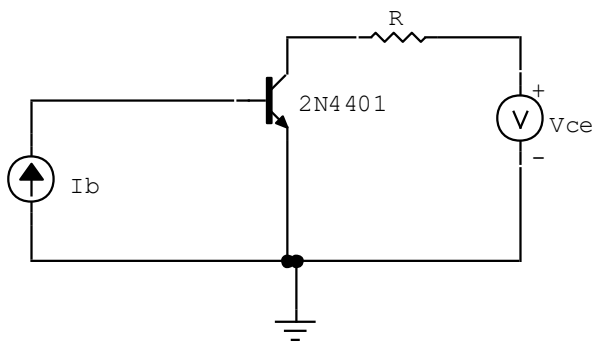

I_C vs V_{CE} with variable I_B

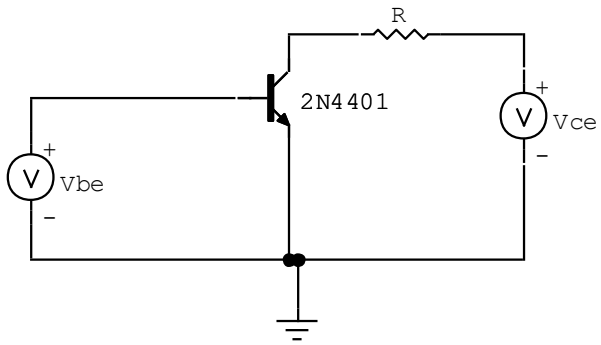

I_C vs V_{CE} with variable V_{BE}

$$\beta = 152$$

$$gm = 0.039\mho$$

$$r_\pi = 3897\Omega$$

$$r_o = 135.46k\Omega$$

Next, I will insert this transistor into the already biased circuits from part 1c(i) and 1c(ii) and examine the results

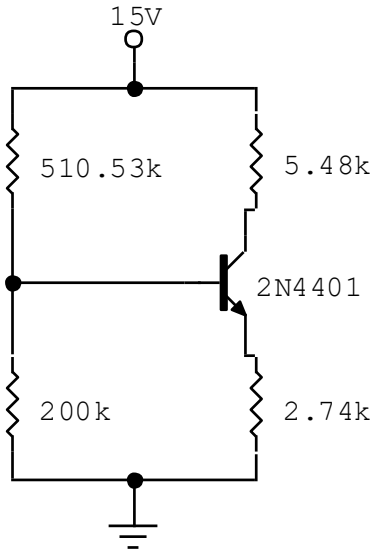

Measured Parameters

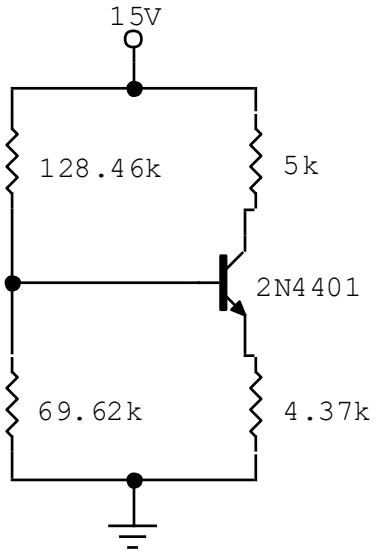

1/3 Rule

D.C. Operating Point [Measured Parameters]

V_B	V_C	V_E	I_B	I_C	I_E
3.290V	9.768V	2.634V	6.487uA	0.9548mA	0.9613mA

D.C. Operating Point [1/3 Rule]

V_B	V_C	V_E	I_B	I_C	I_E
4.971V	10.10V	4.314V	6.674uA	0.985mA	0.9871mA

Discussion [Different Transistors]:

By placing these different transistors into the previously biased circuit it becomes immediately clear why the 1/3 rule is so effective. Although being reasonable for the 2N222A transistor, as soon as the parameters are changed the original bias solution becomes quite intolerable. The 1/3 rule however remains a sufficiently tolerant bias solution.

Part II

A.

This is the common emitter amplifier circuit using the 2N2222A transistor. The values of c_π and c_u will be needed for the calculation of the poles. From the datasheet they are found to be 17pF and 5pF respectively. I will also need r_π and β, they were calculated in Part I_B as r_π = 4.073kΩ and β = 167

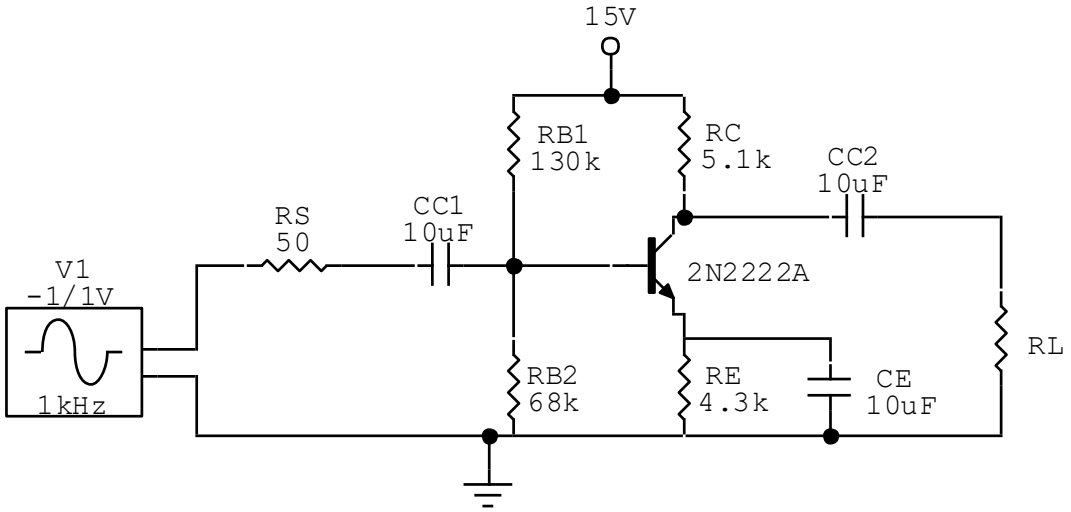

Common Emitter Amplifier

I can extract the bode plots for this amplifier which will allow me to determine the approximate location of the poles. I can then compare these to my calculated values of the poles and make observations about the results. These measured values of the pole and zero locations are reflected in the table at the end of this section

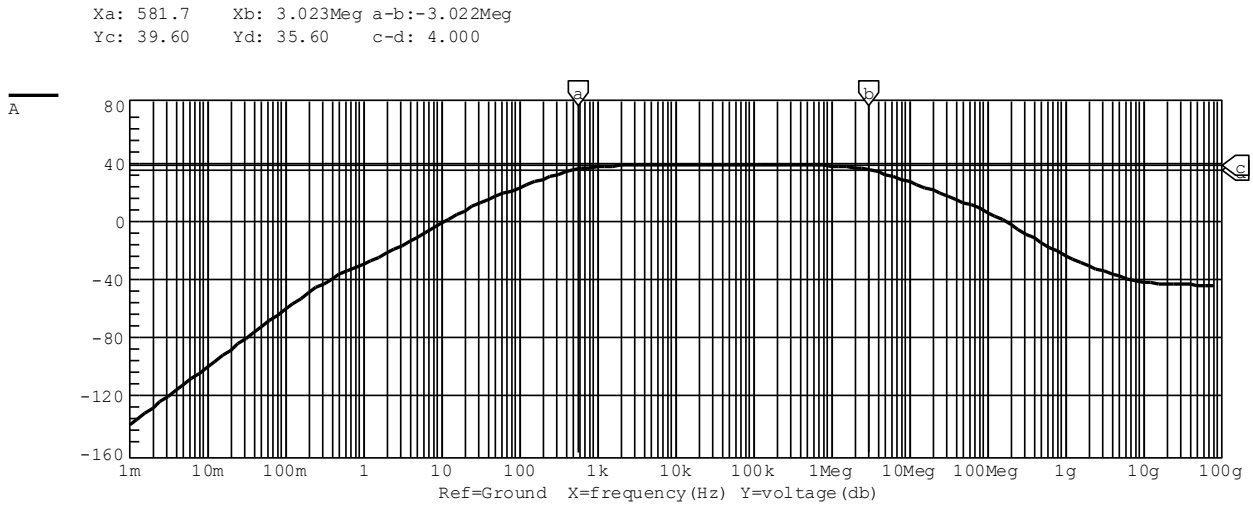

Magnitude Plot

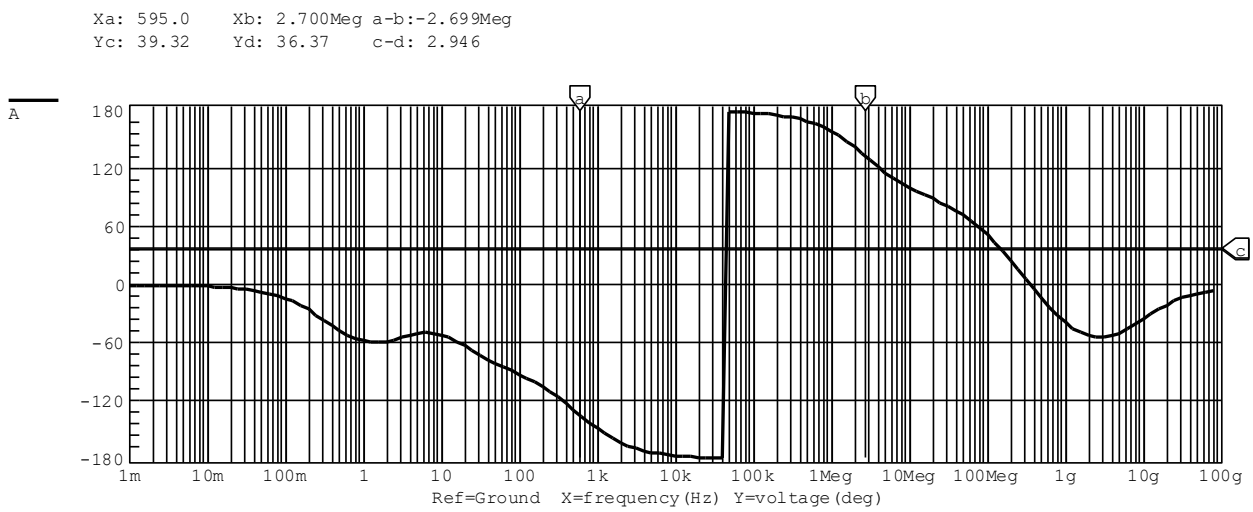

Phase Plot

Calculation of Zeroes and Poles:

I will start with the high frequency response as the poles are easier to obtain. From handout 10 on the common emitter amplifier there will be two poles at the following locations

$$\omega_{HP1} = \frac{1}{R_{BB}||r_\pi||R_S[c_\pi + c_u(1 + gmR_C||R_L)]}$$

$$\omega_{HP2} = \frac{1}{R_C||R_L c_u}$$

Putting in the values I know

$$\omega_{HP1} = \frac{1}{130k||68k||4.073k||50[17pF + 5pF(1 + 0.041 \times 5.1k||5.1k)]}$$

$$\omega_{HP2} = \frac{1}{5.1k||5.1k \times 5pF}$$

$$\omega_{HP1} = 5.92MHz$$

$$\omega_{HP2} = 12.48MHz$$

There are three zeroes associated with the low frequency response, however two of them are at zero as they deal with coupling capacitors. The third for the capacitor C_E is as follows

$$\omega_{LZ3} = \frac{1}{R_E C_E}$$

$$= \frac{1}{4.3k \times 10uF}$$

$$\omega_{LZ1} = 0$$

$$\omega_{LZ2} = 0$$

$$\omega_{LZ3} = 3.7Hz$$

The poles of the low frequency response can be found from the following equations

$$\omega_{LP1} = \frac{1}{(R_S + R_{BB}||[r_\pi + (1 + \beta)R_E])C_{C1}}$$

$$\omega_{LP2} = \frac{1}{(R_C + R_L)C_{C2}}$$

$$\omega_{LP3} = \frac{1}{(R_E||\frac{r_\pi + R_{BB}||R_S}{1 + \beta})C_E}$$

Putting in the values I know

$$\omega_{LP1} = \frac{1}{(50 + 130k||68k||[4.073k + (1 + 167)4.3k])10uF}$$

$$\omega_{LP2} = \frac{1}{(5.1k + 5.1k)10uF}$$

$$\omega_{LP3} = \frac{1}{(4.3k || \frac{4.073k + 130k||68k||50}{1 + 167})10uF}$$

$\omega_{LP1} =$ 377.94mHz

$\omega_{LP2} =$ 1.56Hz

$\omega_{LP3} =$ 652.22Hz

Discussion [Calculated vs Measured Values]:

The calculation of these pole locations comes from the set of equations and methodologies from handout 10 of notes. When compared to the values that were measured from the bode plots it can be seen that there are many similarities, however there is still some difference between the values. It is important to recognize that the errors grow in magnitude for the high frequency poles as opposed to the low frequency poles. This is due to the circuit transformations for $F_L(s)$ that are constructed to solve for the pole locations

Pole/Zero	Calculated	Measured
ω_{LZ1}	0	0
ω_{LZ2}	0	0
ω_{LZ3}	$3.7Hz$	3.81Hz
ω_{LP1}	377.94mHz	456.82mHz
ω_{LP2}	1.56Hz	1.37Hz
ω_{LP3}	652.22Hz	615.83Hz
ω_{HP1}	$5.92MHz$	4.76MHz
ω_{HP2}	$12.48MHz$	21.78MHz

B.

From the bode plot in the previous section it can be seen that the mid band stretches from approximately 1kHz to 1MHz. I will choose a value of 100kHz as this is well within this range and an appropriate mid band frequency

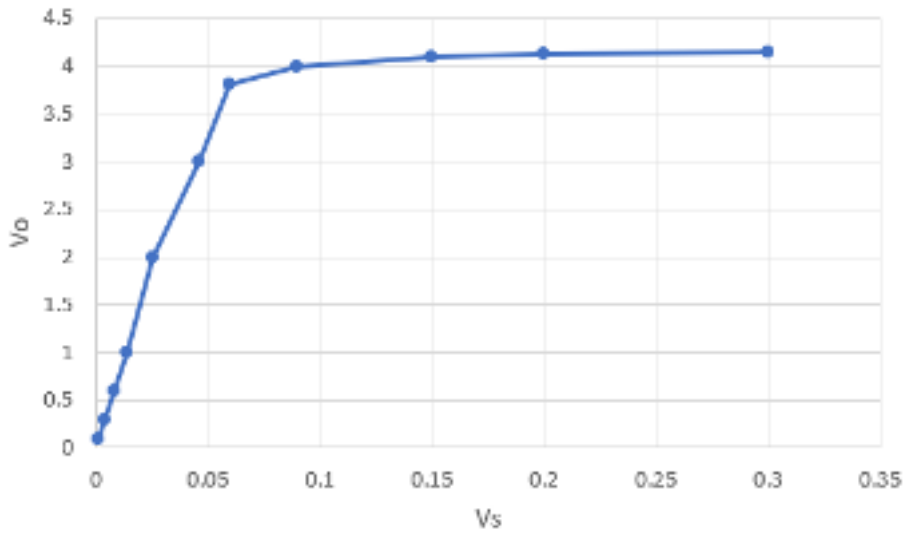

Vo/Vs Plot

It can be seen from this plot that the amplifier stops exhibiting linear behaviour around 50mV

C.

Measured Input Impedance:

The impedance can be measured in circuit maker by using the generator as a test source and analyzing the impedance it sees. This will be conducted at 100kHz as this is well within the mid band range

$$R_{in} = \frac{V_{TEST}}{I_{TEST}}$$

$$R_{in} = \frac{5.63V}{1.58mA}$$

$$R_{in} = 3.56k\Omega$$

Calculated Input Impedance:

$$R_{in} = R_{BB}||r_{\pi}$$

$$R_{in} = 130k||68k||4.073k$$

$$R_{in} = 3.73k\Omega$$

Discussion [Calculated vs Measured Impedance]:

This input impedance was calculated at a frequency which satisfied mid band. At mid band, C_E acts as a short circuit and so the impedance can be found quite easily. The calculated and measured values correspond highly with one another.

D.

Measured Output Impedance:

The output impedance can be calculated by shorting the input source and attaching it at the output around R_L

$$R_{out} = \frac{V_{TEST}}{I_{TEST}}$$

$$R_{out} = \frac{3.11V}{1.13mA}$$

$$R_{out} = 2.75k\Omega$$

Calculated Output Impedance:

$$R_{out} = R_C||R_L$$

$$R_{out} = 5.1k||5.1k$$

$$R_{out} = 2.55k\Omega$$

Discussion [Calculated vs Measured Impedance]:

Unlike the input impedance, to measure the impedance at the output the source generator must be moved in parallel to R_L. The previous source is then shorted and the output impedance can be obtained. The measured and calculated values confirm one another.

E. [2N3904]

I will repeat this process for the 2N3904 transistor. The values of c_π and c_u will be needed for the calculation of the poles. From the datasheet they are found to be 3.4pF and 2pF respectively. I will also need r_π and β, they were calculated in Part I_D as r_π = 3.053kΩ

and β = 116

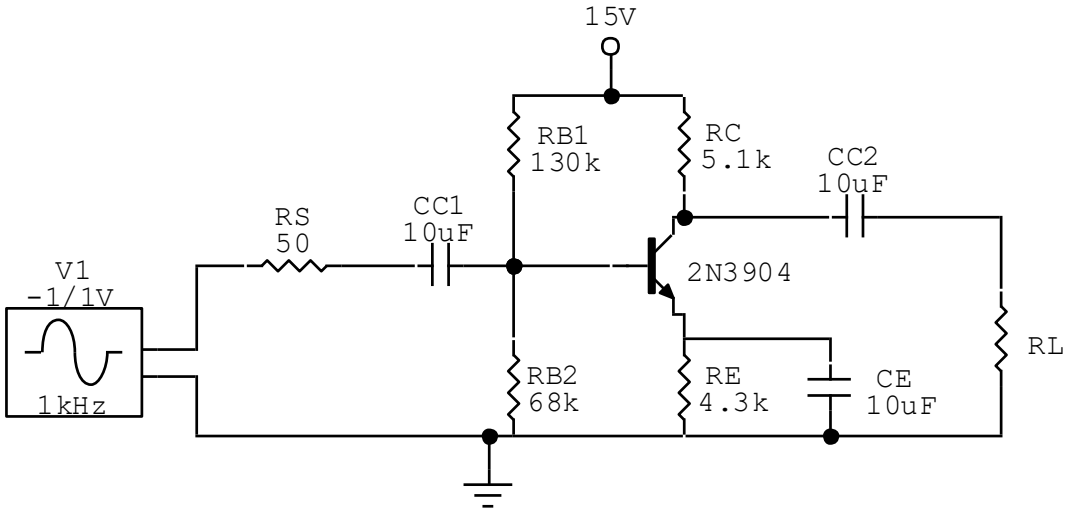

Common Emitter Amplifier [2N3904]

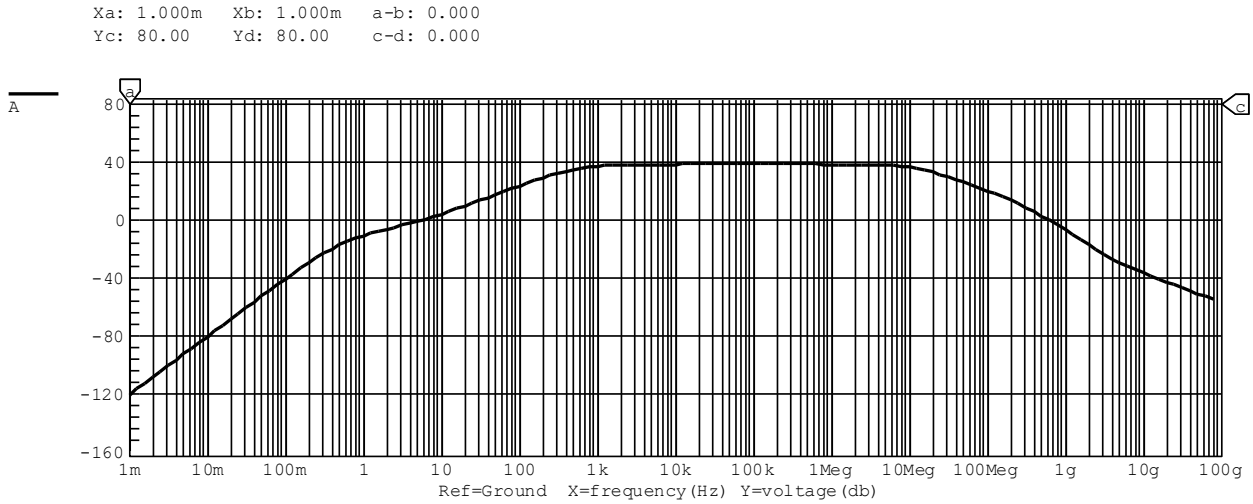

Magnitude Plot

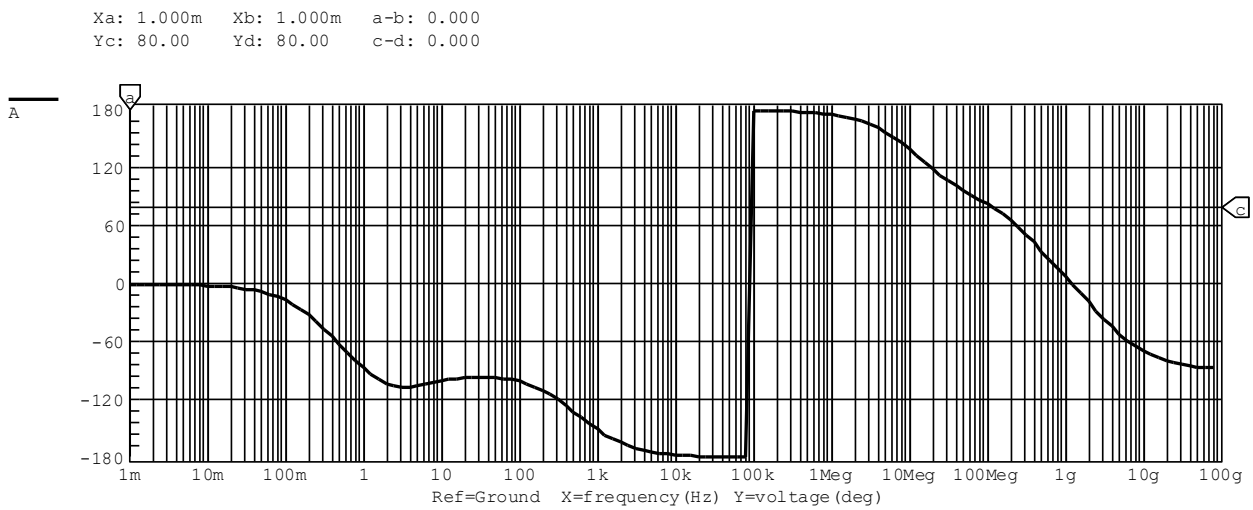

Phase Plot

Calculation of Zeroes and Poles:

I will use the same equations from the previous section to calculate the pole/zero locations

$$\omega_{LZ1} = 0$$

$$\omega_{LZ2} = 0$$

$$\omega_{LZ3} = \frac{1}{R_E C_E}$$

$$\omega_{LP1} = \frac{1}{(R_S + R_{BB}||[r_\pi + (1+\beta)R_E])C_{C1}}$$

$$\omega_{LP2} = \frac{1}{(R_C + R_L)C_{C2}}$$

$$\omega_{LP3} = \frac{1}{(R_E||\frac{r_\pi + R_{BB}||R_S}{1+\beta})C_E}$$

$$\omega_{HP1} = \frac{1}{R_{BB}||r_\pi||R_S[c_\pi + c_u(1 + gmR_C||R_L)]}$$

$$\omega_{HP2} = \frac{1}{R_C||R_L c_u}$$

Pole/Zero	Calculated	Measured
ω_{LZ1}	0	0
ω_{LZ2}	0	0
ω_{LZ3}	$3.7Hz$	3.92Hz
ω_{LP1}	391.44mHz	411.35mHz
ω_{LP2}	1.56Hz	1.41Hz
ω_{LP3}	561.34Hz	607.90Hz
ω_{HP1}	18.23MHz	13.17MHz
ω_{HP2}	35.61MHz	86.24MHz

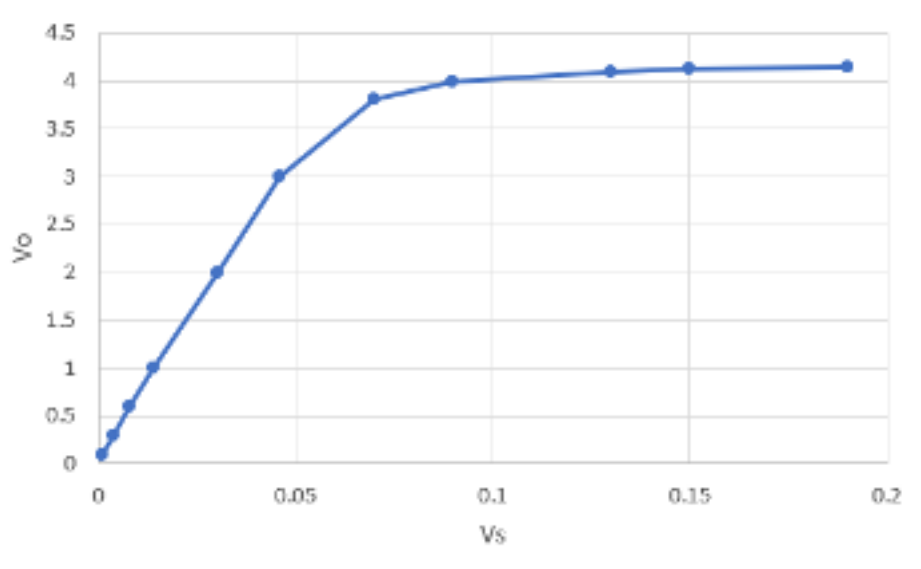

Vo/Vs Plot

[2N4401]

I will repeat this process for the 2N4401 transistor. The values of c_π and c_u will be needed for the calculation of the poles. From the datasheet they are found to be 18pF and 5pF respectively. I will also need r_π and β, they were calculated in Part I_D as r_π = 3.897kΩ

and β = 152

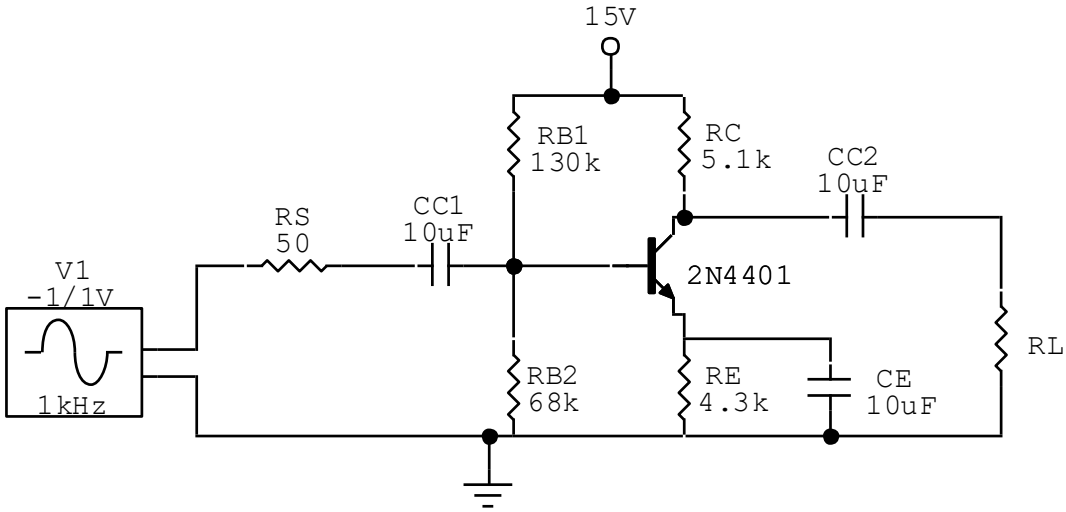

Common Emitter Amplifier [2N4401]

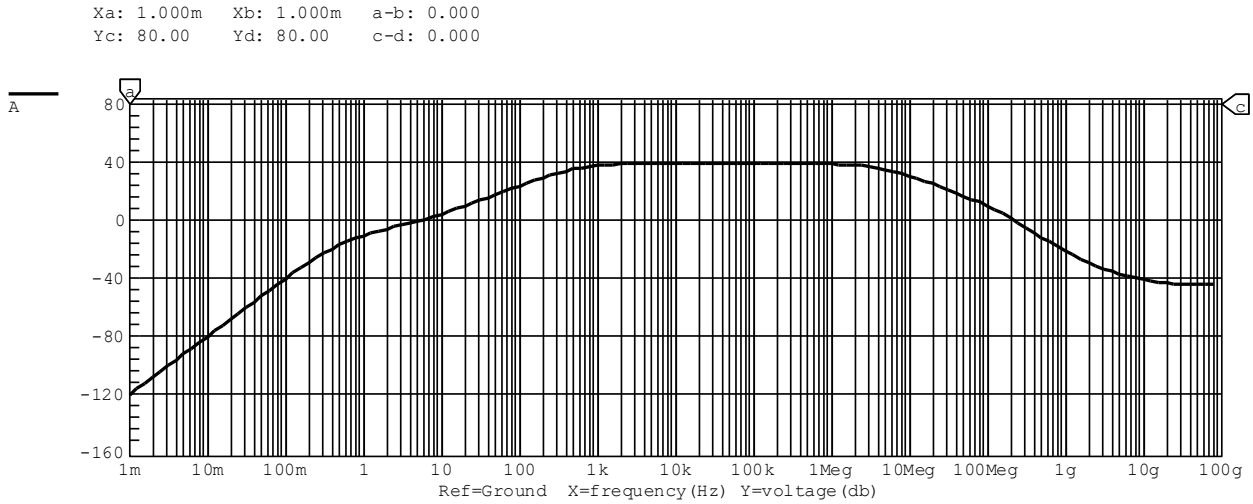

Magnitude Plot

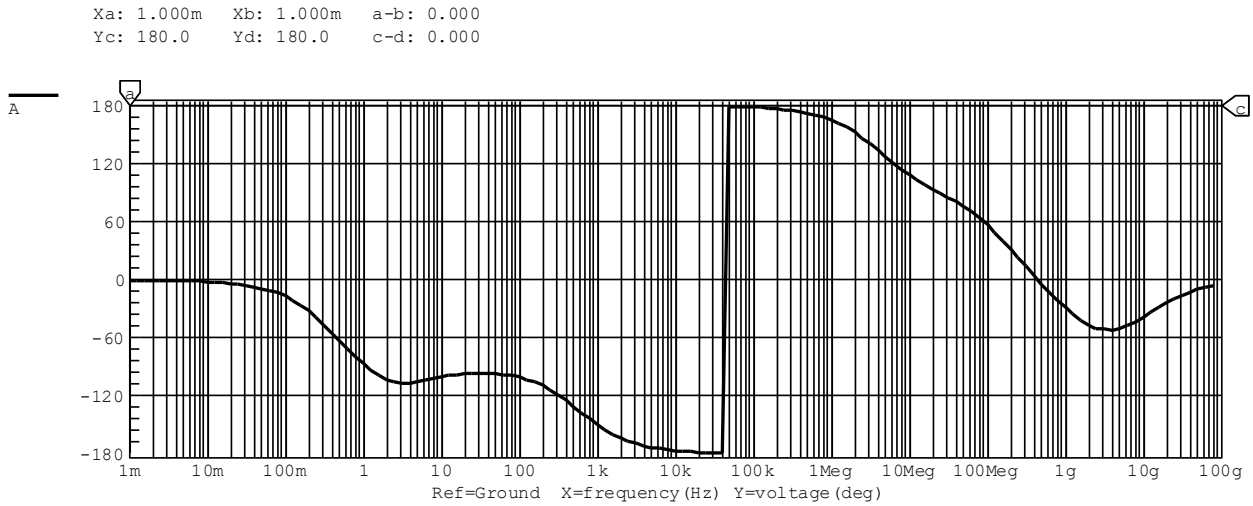

Phase Plot

Calculation of Zeroes and Poles:

I will use the same equations from the previous section to calculate the pole/zero locations

$$\omega_{LZ1} = 0$$

$$\omega_{LZ2} = 0$$

$$\omega_{LZ3} = \frac{1}{R_E C_E}$$

$$\omega_{LP1} = \frac{1}{(R_S + R_{BB}||[r_\pi + (1+\beta)R_E])C_{C1}}$$

$$\omega_{LP2} = \frac{1}{(R_C + R_L)C_{C2}}$$

$$\omega_{LP3} = \frac{1}{(R_E||\frac{r_\pi + R_{BB}||R_S}{1+\beta})C_E}$$

$$\omega_{HP1} = \frac{1}{R_{BB}||r_\pi||R_S[c_\pi + c_u(1 + gmR_C||R_L)]}$$

$$\omega_{HP2} = \frac{1}{R_C||R_L c_u}$$

Pole/Zero	Calculated	Measured
ω_{LZ1}	0	0
ω_{LZ2}	0	0
ω_{LZ3}	$3.7Hz$	3.92Hz
ω_{LP1}	391.52mHz	401.46mHz
ω_{LP2}	1.56Hz	1.41Hz
ω_{LP3}	613.54Hz	611.70Hz
ω_{HP1}	8.15MHz	13.17MHz
ω_{HP2}	15.72MHz	56.14MHz

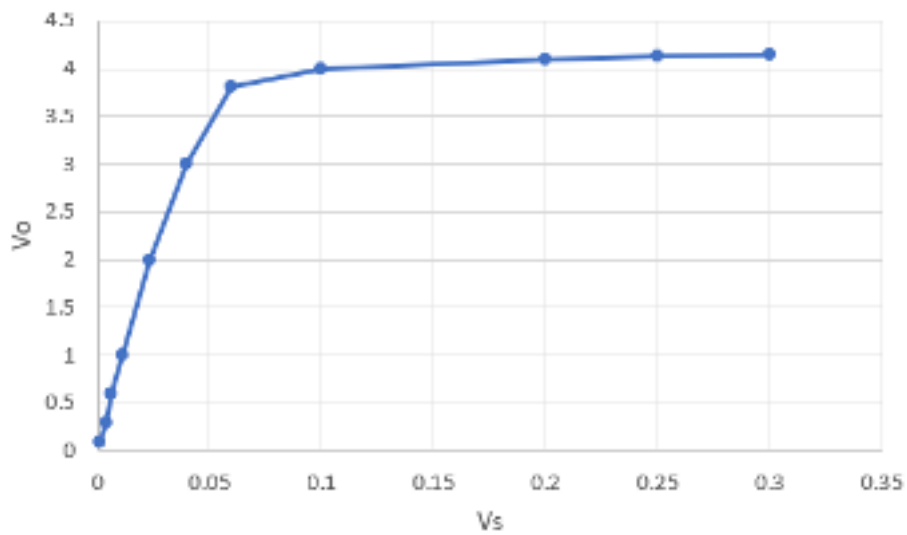

Vo/Vs Plot

Discussion [Best Performance]:

All three transistors display acceptable behaviour in this common emitter circuit. The 2N3904 has the most stable Vo/Vs plot and has a smooth transition from being non-linear. All of the transistors perform similarly but, in my opinion, the 2N3904 yields the best performance.

Part III

A.

This is the common base amplifier circuit using the 2N2222A transistor. The values of c_π and c_u will be needed for the calculation of the poles. From the datasheet they are found to be 17pF and 5pF respectively. I will also need r_π and β, they were calculated in Part I_B as r_π = 4.073kΩ and β = 167

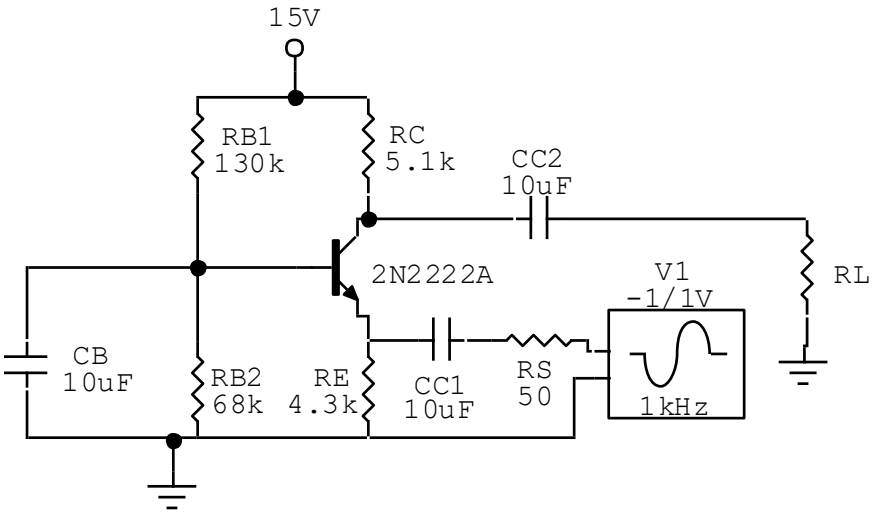

Common Base Amplifier

I can extract the bode plots for this amplifier which will allow me to determine the approximate location of the poles. I can then compare these to my calculated values of the poles and make observations about the results. These measured values of the pole and zero locations are reflected in the table at the end of this section

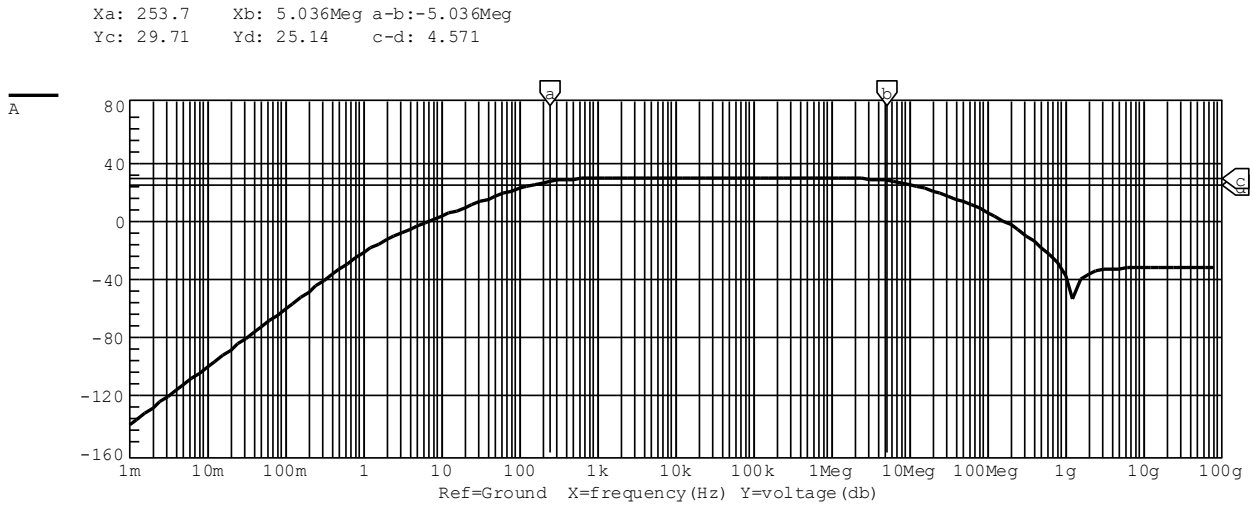

Magnitude Plot

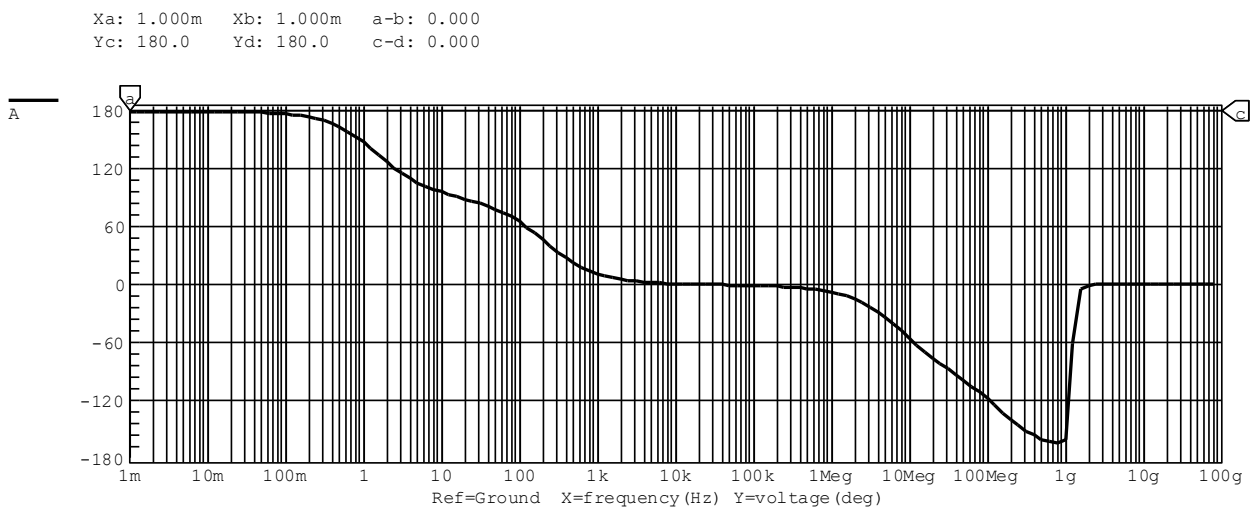

Phase Plot

Calculation of Zeroes and Poles:

I will start with the high frequency response as the poles are easier to obtain. From handout 11 on the common emitter amplifier there will be two poles at the following locations

$$\omega_{HP1} = \frac{1}{\frac{r_\pi}{1+\beta}||R_E||R_S c_\pi}$$

$$\omega_{HP2} = \frac{1}{R_C||R_L c_u}$$

Putting in values I know

$$\omega_{HP1} = \frac{1}{5.1k||5.1k \times 5pF}$$

$$\omega_{HP2} = \frac{1}{\frac{4.073k}{1+167}||4.3k||50 \times 18pF}$$

$$\omega_{HP1} = 12.48MHz$$

$$\omega_{HP2} = 543.62MHz$$

There are three zeroes associated with the low frequency response, however two of them are at zero as they deal with coupling capacitors. The third for the capacitor C_B is as follows

$$\omega_{LZ3} = \frac{1}{R_{BB}C_B}$$

$$= \frac{1}{130k||68k \times 10uF}$$

$$\omega_{LZ1} = 0$$

$$\omega_{LZ2} = 0$$

$$\omega_{LZ3} = 356.5mHz$$

The poles of the low frequency response can be found from the following equations

$$\omega_{LP1} = \frac{1}{R_{BB}||[r_\pi + (1+\beta)R_E])C_B}$$

$$\omega_{LP2} = \frac{1}{(R_C + R_L)C_{C2}}$$

$$\omega_{LP3} = \frac{1}{(\frac{r_\pi}{1+\beta}||R_E + R_S)C_{C1}}$$

Putting in the values I know

$$\omega_{LP1} = \frac{1}{130k||68k||[4.073k + (1+167)4.3k])10uF}$$

$$\omega_{LP2} = \frac{1}{(5.1k + 5.1k)10uF}$$

$$\omega_{LP3} = \frac{1}{(\frac{4.073k}{1+167}||4.3k+50)10uF}$$

$$\omega_{LP1} = 378.39\text{mHz}$$

$$\omega_{LP2} = 1.56\text{Hz}$$

$$\omega_{LP3} = 214.76\text{Hz}$$

Discussion [Calculated vs Measured Values]:

The calculation of these pole locations comes from the set of equations and methodologies from handout 11 of notes. When compared to the values that were measured from the bode plots it can be seen that there are many similarities, however there is still some difference between the values. It is important to recognize that the errors grow in magnitude for the low frequency poles as opposed to the high frequency poles. This is due to the circuit transformations for $F_H(s)$

Pole/Zero	Calculated	Measured
ω_{LZ1}	0	0
ω_{LZ2}	0	0
ω_{LZ3}	$356.5mHz$	1.21Hz
ω_{LP1}	378.39mHz	621.75mHz
ω_{LP2}	1.56Hz	4.18Hz
ω_{LP3}	214.76Hz	279.21Hz
ω_{HP1}	$12.48MHz$	15.81MHz
ω_{HP2}	$543.62MHz$	631.24MHz

B.

From the bode plot in the previous section it can be seen that the mid band stretches from approximately 1kHz to 5MHz. I will choose a value of 100kHz as this is well within this range and an appropriate mid band frequency

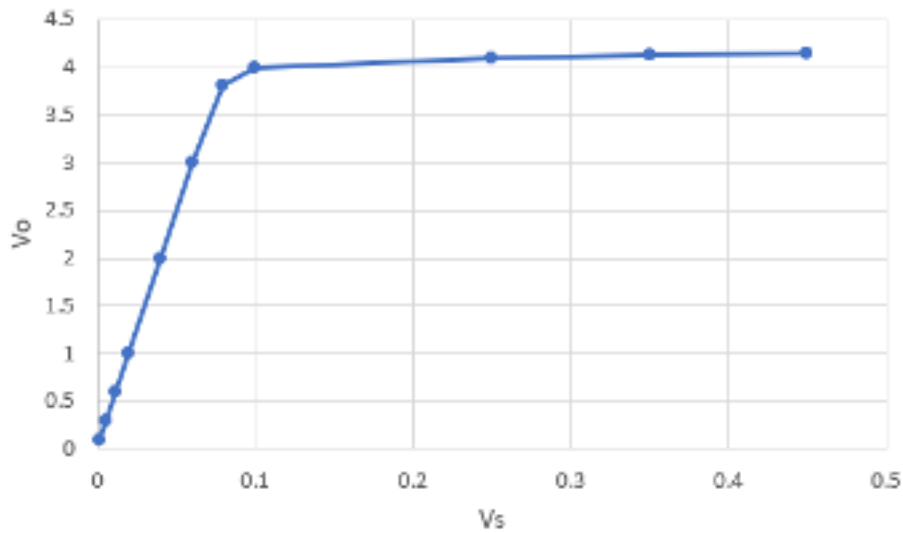

Vo/Vs Plot

It can be seen from this plot that the amplifier stops exhibiting linear behaviour around 80mV

C.

Measured Input Impedance:

The impedance can be measured in circuit maker by using the generator as a test source and analyzing the impedance it sees. This will be conducted at 100kHz as this is well within the mid band range

$$R_{in} = \frac{V_{TEST}}{I_{TEST}}$$

$$R_{in} = \frac{1.126V}{35.06mA}$$

$$R_{in} = 32.12k\Omega$$

Calculated Input Impedance:

$$R_{in} = R_E || \frac{1}{1+\beta} r_\pi$$

$$R_{in} = 4.3k || \frac{1}{1+167} \times 4.073k$$

$$R_{in} = 24.11k\Omega$$

Discussion [Calculated vs Measured Impedance]:

This input impedance was calculated at a frequency which satisfied mid band. At mid band, C_B acts as a short circuit and so the impedance can be found quite easily. The calculated and measured values correspond highly with one another.

D.

Measured Output Impedance:

The output impedance can be calculated by shorting the input source and attaching it at the output around R_L

$$R_{out} = \frac{V_{TEST}}{I_{TEST}}$$

$$R_{out} = \frac{4.76V}{1.196mA}$$

$$R_{out} = 3.98k\Omega$$

Calculated Output Impedance:

$$R_{out} = R_C || R_L$$

$$R_{out} = 5.1k || 5.1k$$

$$R_{out} = 2.55k\Omega$$

Discussion [Calculated vs Measured Impedance]:

Unlike the input impedance, to measure the impedance at the output the source generator must be moved in parallel to R_L. The previous source is then shorted and the output impedance can be obtained. The measured and calculated values confirm one another.